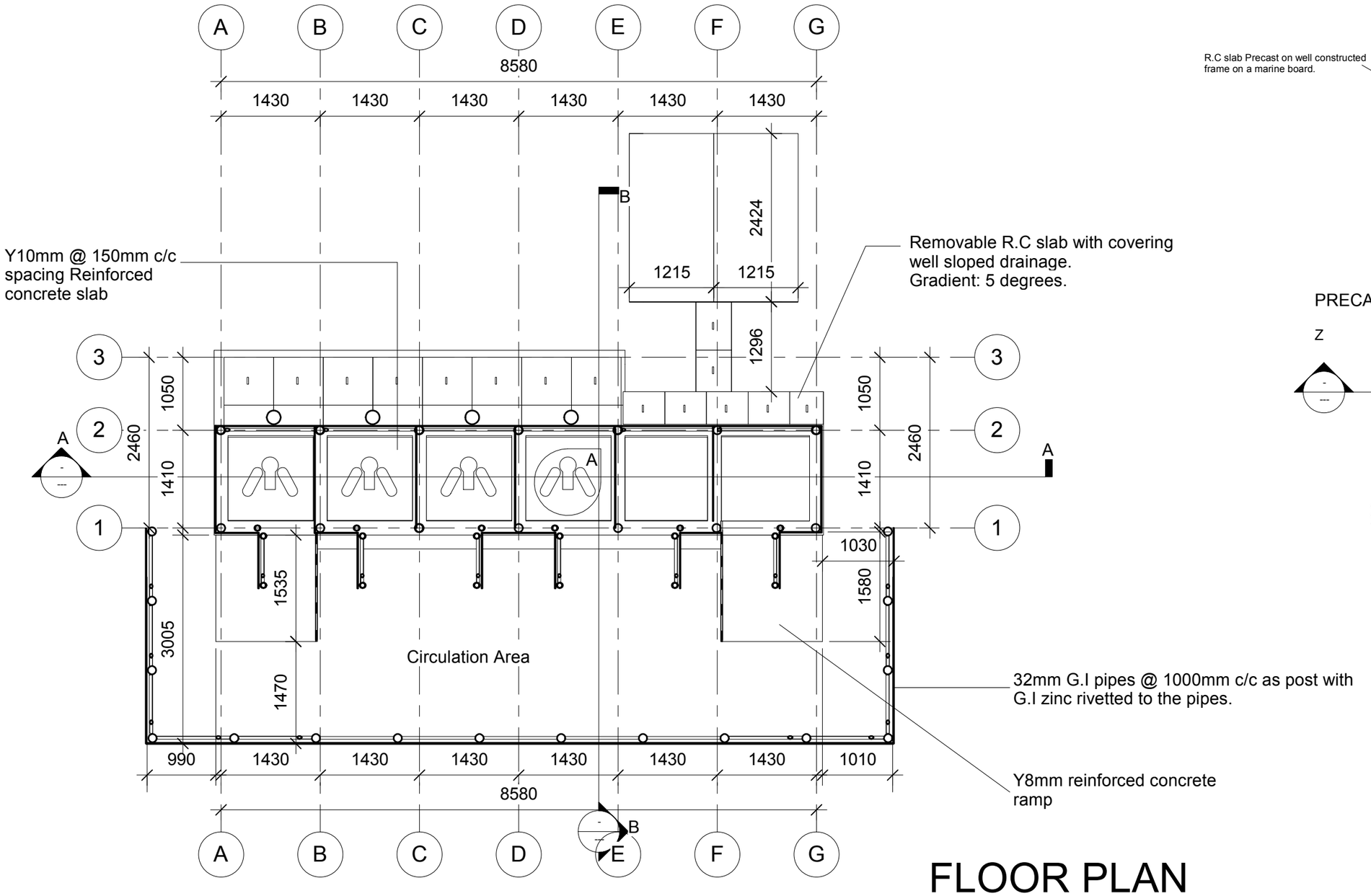

FLOOR PLAN

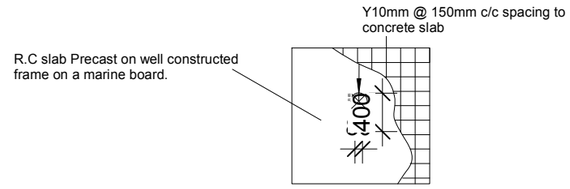

Precast RC slab

PRECAST CONCRETE SLAB FORM WORK

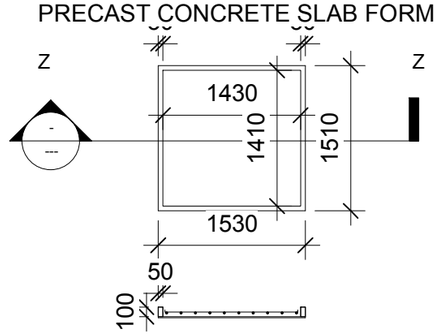

Sheet Metal Base

NOTES	DRAWINGS		DATE:	DESIGNED	PAGE
All dimensions are in Millimetres, dimensions should be taken as written only. Any alterations shall be done only by the Architect/ DRC supervisors.	LATRINE AND SHOWER BLOCK	WASH Sector NIGERIA	19/ 08/ 2020	YARAYI Lawan / Shelter/ NFI	1 of 7